OUTDOOR ACCESSORY KIT

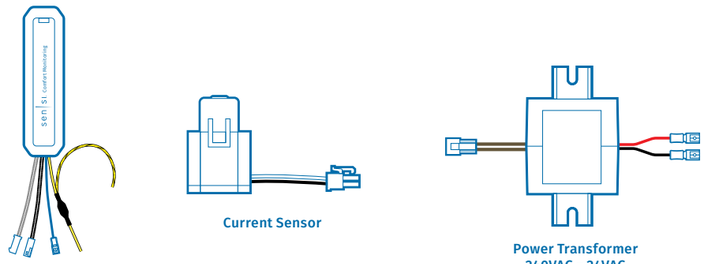

GENERAL:

When adding the Sensi Predict Outdoor Kit with a system having a dual fuel or zoning board, the equipment control terminals of the board are considered the thermostat controls for the equipment within these instructions.

If the Outdoor Equipment control wires don't originate within the indoor equipment - ie, they go to the thermostat or splice into the control wires between the thermostat and indoor equipment - additional wiring will need to be installed so the Y, Y2 and O/B control wires to outdoor equipment are being signaled from the indoor equipment controls location.

NOTE:

With some dual fuel control boards, the outdoor Y controls do not tie into the indoor Y controls, so there may need to be additional wires added to route the outdoor controls to the indoor control location.

Y-WIRE CONNECTIONS (Y-WIRE CONNECTIONS ARE UNIQUE WITH SENSI PREDICT):

The (existing) Y-wire between the indoor and outdoor equipment is re-purposed for Y/PLC communications between the indoor and outdoor Sensi Predict devices. This is done by connecting it with wire-nuts to the Y/PLC wires (Labeled "Y to Outdoor" and "Y to Indoor") from the Sensi Predict hardware. In its place on the corresponding indoor and outdoor equipment controls, connect the filtered Y-wire ("Y to System") from the Sensi Predict devices.

There cannot be any other controls tied in with or interrupting the Y/PLC link between the indoor and outdoor Sensi Predict devices (exception being simple contact switches such as those found in most flood stop switches).

The Sensi Predict Y-wire (with filter) connects to the equipment. The filter is there to remove any electrical noise from the equipment or controls (dual fuel board, thermostat, zoning board).

The Sensi Predict Y/PLC wire (with no filter) allows the indoor and outdoor Sensi Predict equipment to communicate (along with carrying the 24VAC control signal when presented) over the existing Y-wire wire.

C-WIRE CONNECTION:

It should be noted that the "C" connection must be connected from the outdoor equipment to the indoor equipment (including the Sensi Predict hardware) even if not needed or used by the thermostat control equipment.

Sensi Predict™

OUTDOOR ACCESSORY KIT INSTALLATION GUIDE

The Sensi Predict™ kit is designed for conventional, residential HVAC equipment (furnace, AC, & heat pumps) in homes that have Internet access. The Sensi Predict system acts as a monitor only and does not provide any HVAC control.

As the installing technician, it is your responsibility to know what requirements, hazards and precautions exist, and to install the monitoring system in a safe manner.

Do not alter the mounting of parts within the HVAC equipment.

- Installer must be a qualified technician, familiar with installation and service of HVAC equipment, associated wiring, and electrical codes.
- Follow all local and national codes and ordinances.
- The Sensi Predict power transformers are designed for connection to 120VAC or 240VAC volt electric powers within existing HVAC chassis only.
- After installation or replacement, follow the HVAC manufacturer's recommended instructions to ensure proper operation of the HVAC equipment.
- Labeling any HVAC wires that need to be disconnected during the installation is recommended.

OPERATING CONDITION:

Operating Temp -40°F to 158°F
Storage Temp -40°F to 176°F

ELECTRICAL RATING:

Line Voltage Inputs 90-132VAC / 180-264VAC
Frequency 60Hz
Control Line Voltage 24VAC at 60Hz

WARNING

FAILURE TO COMPLY WITH THE FOLLOWING WARNINGS COULD RESULT IN PERSONAL INJURY OR PROPERTY DAMAGE

SHOCK HAZARD

- Disconnect electrical power supplies before installation or servicing.

FIRE HAZARD

- Do not exceed specified voltages. Only power transformers should be connected to line voltage. All other wires shall only connect to low voltage (24 VAC). Safely route and secure all wiring after installation.
- Protect powered devices from direct contact with water. Replace any device exposed to water. (Does not apply to Supply Air Sensors, Return Air Sensors, Suction Line Sensors, Liquid Line Sensors.)

0037-7677005

The Sensi Predict Contractor PRO Portal can be accessed at sensipredictpro.com
For login support, contact your office administrator. For support within the PRO Portal, call 1-877-424-1715.

OUTDOOR ACCESSORY INSTALLATION

WARNING

Disconnect electrical power supplies before installation or servicing.

MAIN CABLE AND OUTDOOR WIRING COLOR GUIDE

Y	G	W	C	Y B	Y2	W2	O/B	P
YELLOW COOLING	GREEN FAN	WHITE HEAT	BLUE COMMON	YELLOW / BLACK Y/ PLC	BLACK COOLING	BROWN HEAT 2	ORANGE REVERSING VALVE	PINK NOT USED

NOTE: Control wire colors may not match installed system colors. Not all found on outdoor device.

TRADITIONAL THERMOSTAT (WITH A/C)

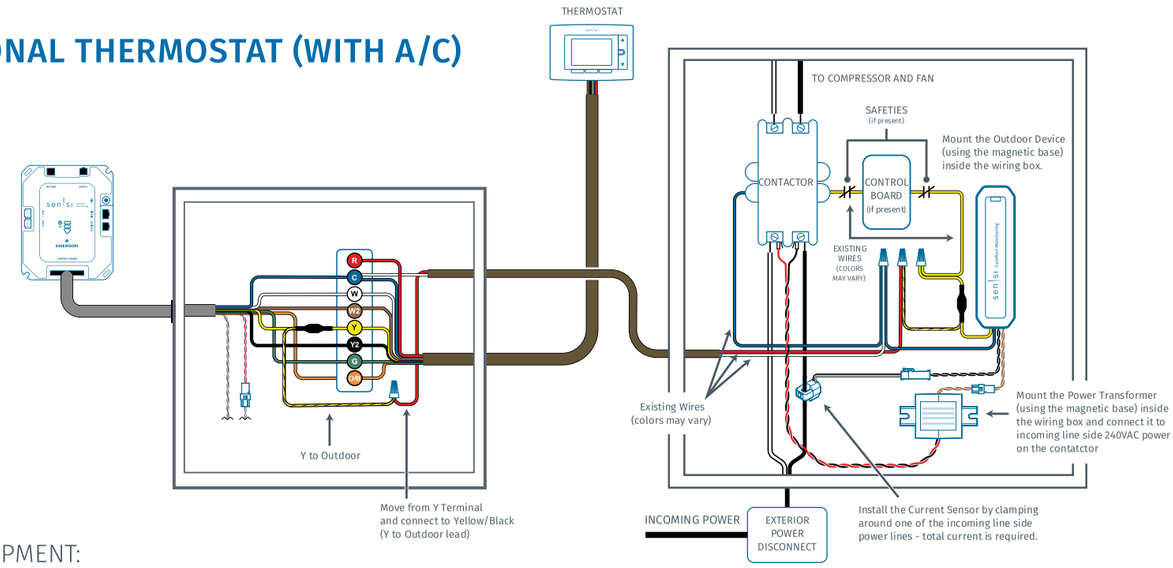

INDOOR EQUIPMENT:

- Disconnect 1st stage cooling (Y) control wire going to outdoor equipment from control board or thermostat wire.
- Connect Sensi Predict Main Cable Y wire (with filter–labeled “Y to System”) in its place.
- Connect Sensi Predict Main Cable Y/PLC wire (labeled “Y to Outdoor”) to disconnected 1st stage cooling (Y) control wire going to outdoor equipment.

OUTDOOR EQUIPMENT:

- Disconnect and properly identify the incoming C & Y control wires
  - C wire should measure 2Ω or less to ground
  - Y wire should measure between 10 and 20Ω to ground (or lift Y wire inside & look for open or high resistance)
- Connect the 3 wires from the Outdoor device as follows:
  - Blue (C wire) to Common wires (or terminal)
  - Yellow (Y wire) to outdoor equipment Y wire (or terminal)
  - Yellow/Black (Y/PLC wire) to indoor Y wire (repurposed for Y/PLC communications)

Note: Sensi Predict outdoor device is in series with the Y wire. To communicate properly, the Y/PLC wires must be connected directly between the indoor Sensi Predict Main Cable and the Sensi Predict Outdoor Device.

DUAL FUEL / ZONING (WITH HEAT PUMP)

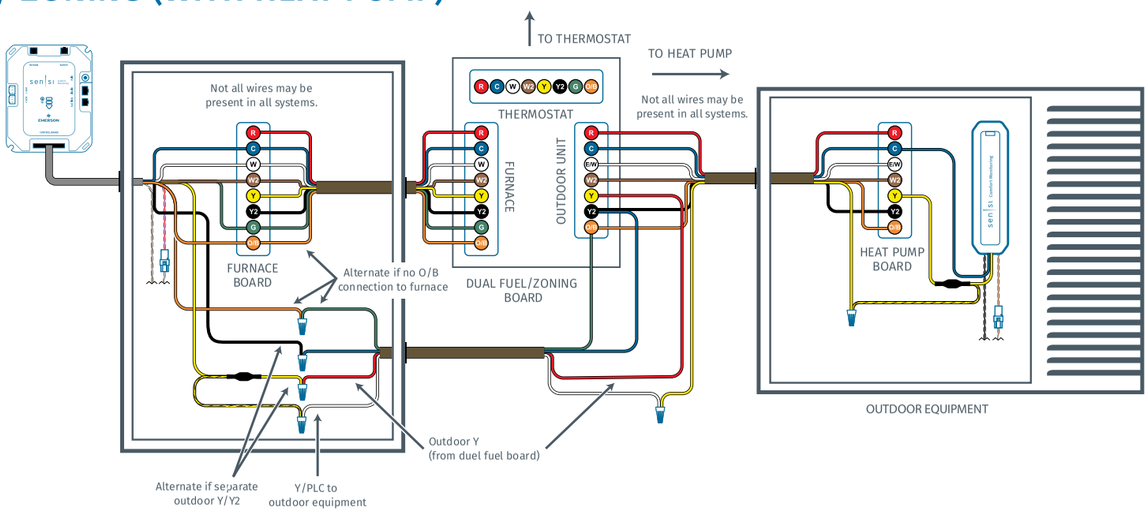

DUAL FUEL / ZONING BOARD:

- If outdoor controls do not originate at the Duel Fuel / Zoning control board follow traditional wiring instructions.
- Disconnect existing wire from outdoor control Y terminal and connect it to a jumper wire designated as ‘Y to Outdoor’. This will connect to the Sensi Predict Main Cable Y/PL wire (labeled “Y to Outdoor”).
- Connect a second jumper wire to the outdoor control Y terminal designated as “Y to system”, this will connect to the Sensi Predict Main Cable. “Y to System” wire on the
- Note: you may need to install jumper wires for outdoor Y2 or O/B to connect with the corresponding wires on the Sensi Predict Main Cable Y wire (with filter-labeled “Y to System”).

INDOOR EQUIPMENT:

- Connect Sensi Predict Main Cable Y/PLC wire (labeled “Y to Outdoor”) to added jumper wire going directly to outdoor equipment.
- Connect Sensi Predict Main Cable Y wire (with filter-labeled “Y to System”) to jumper wire from Dual Fuel / Zoning control board outdoor Y terminal.

OUTDOOR EQUIPMENT:

- Disconnect and properly identify the incoming C & Y control wires
  - C wire should measure 2Ω or less to ground
  - Y wire should measure between 10 and 20Ω to ground (or lift Y wire inside & look for open or high resistance)
- Connect the 3 wires from the Outdoor device as follows:
  - Blue (C wire) to Common wires (or terminal)
  - Yellow (Y wire) to outdoor equipment Y wire (or terminal)
  - Yellow/Black (Y/PLC wire) to indoor Y wire (repurposed for Y/PLC communications)

Note: Sensi Predict outdoor device is in series with the Y wire. To communicate properly, the Y/PLC wires must be connected directly between the indoor Sensi Predict Main Cable and the Sensi Predict Outdoor Device.